2.4 GHz CMOS Digitally Programmable Power Amplifier for Power Back-off Operation

F. Santos, A. Mariano, B. Leite
Group of Integrated Circuits and Systems, GICS
Federal University of Paraná, UFPR
Curitiba, Brazil

Abstract— **This paper presents the simulation results of a linear, fully integrated, two-stage digitally programmable 130 nm CMOS power amplifier (PA) operating at 2.4 GHz. Its power stage is composed of a set of amplifying cells which can be enabled or disabled independently by a digital control circuit. All seven operational modes are univocal in terms of 1 dB output compression point (OCP_{1dB}), saturated output power (P_{SAT}) and power gain at 2.4 GHz. The lowest power mode achieves an 8.1 dBm P_{SAT}, a 13.5 dB power gain and consumes 171 mW DC power (P_{DC}) at an OCP_{1dB} of 6 dBm, whereas the highest power mode reaches an 18.9 dBm P_{SAT} and a 21.1 dB power gain and consumes 415 mW P_{DC} at an OCP_{1dB} of 18.2 dBm.**

Keywords—130 nm CMOS PA; Programmable PA; 2.4 GHz PA

I. Introduction

A determinant feature for mobile devices is their battery lifetime. This characteristic is driven by their most power consuming components and affects directly consumers' satisfaction. In a radiofrequency (RF) transceiver, one of the most power consuming circuits is the power amplifier (PA) [1].

A programmable PA may be employed as an approach to minimize power consumption. This architecture is composed of a set of amplifying cells and a digital control. Depending on the required output power, those cells can be independently switched *on* or *off*. Thereby, the required output power is best fitted in the overall power consumption [2].

In an integrated circuit design point of view, different technologies may be employed to design PAs. CMOS benefits from being highly scalable, low cost and widely available at foundries while occupying small areas and withstanding high operation speeds [3, 4].

However, some challenges arise if CMOS power RF design is intended: hot carrier degradation [4] and low breakdown voltage, poor linearity, RF model inaccuracies and lack of high-voltage capacitors and better quality passives [3]. On top of that, due to supply scaling, high currents are necessary to obtain high output power. This leads to higher passive parasitic values, power dissipation issues and efficiency degradation due to high temperatures [1].

Different efforts on developing a 2.4 GHz multimode CMOS PA are proposed in the literature. To obtain selectable efficiency levels, Santos *et al.* implement a control circuit to enable or disable differently sized transistors in the gain stage [5]. On the other hand, Yoon *et al.* use a control circuit to enable or disable differently sized transistors in the power stage [2]. In [6], Raeynaert *et al.* propose the implementation of a control circuit to switch *on* and *off* four independent differential amplifiers which are balun coupled to a common load. In their turn, An *et al.* use a control circuit which enables or disables parallel power structures coupled by a parallel combining transformer to drive a common load [7]. Lastly, Tuffery *et al.* propose a differential power cell topology to drive a common load coupled by distributed active transformers [8].

In this work, a two stage multimode 130 nm CMOS 2.4 GHz PA is presented. The proposed PA uses a digital control circuit to enable or disable amplifying cells in the power stage. This architecture aims to provide a wide set of univocal maximum power and gain minimizing DC power (P_{DC}) consumption.

II. Circuit Design and Considerations

A. Principle of operation

The transconductance of a MOSFET depends directly on its gate width. Thus, transistors with greater widths achieve higher output power levels at cost of a higher P_{DC} consumption. Fig. 1 depicts an architecture capable of enabling and disabling differently sized transistors to drive a common load. Depending on the aimed output power, a different combination of amplifying cells can be switched *on*

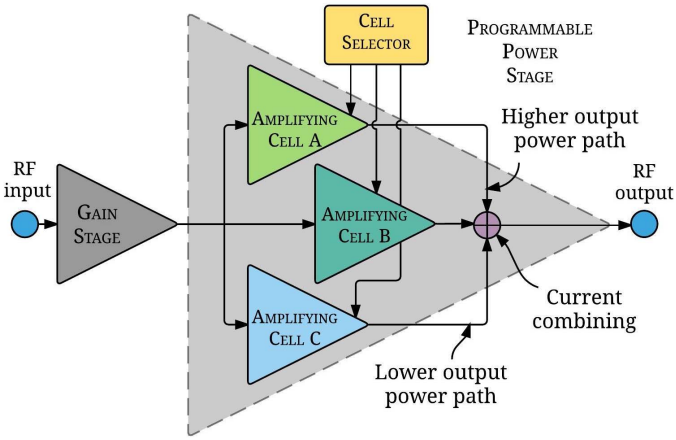

Fig. 1. Proposed topology for enabling or disabling differently dimensioned amplifying cells. If a certain P_{OUT} is achievable by each cell individually, solely C will be enabled, as it consumes less P_{DC}.

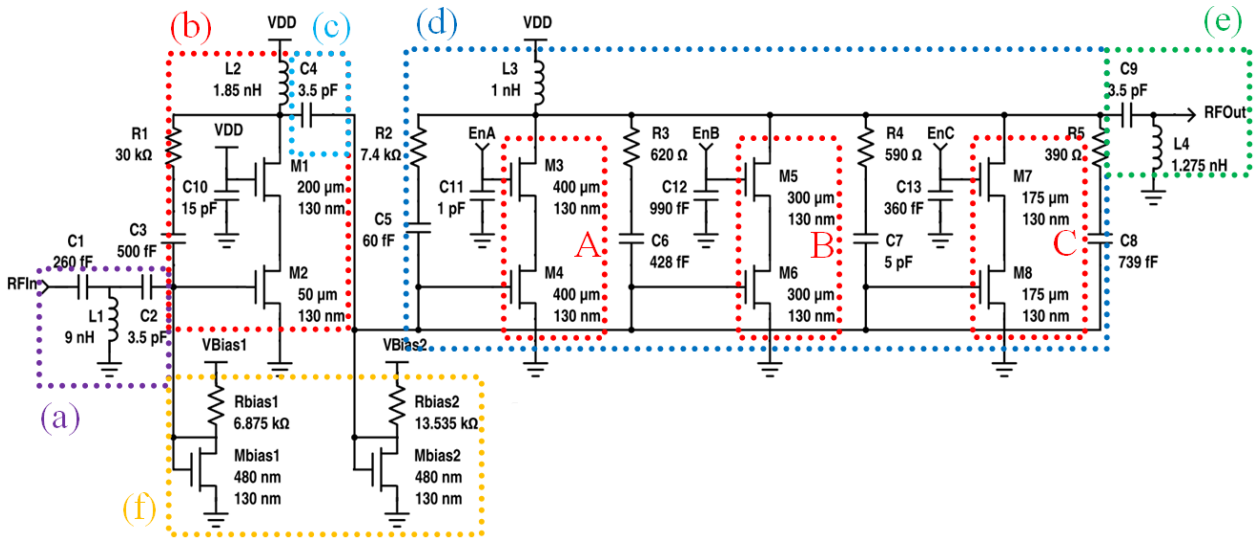

Fig. 2. The proposed PA composed of an input matching network (a), a gain stage (b), an inter-stage matching and coupling component (c), a programmable power stage (d), an output matching network (e), and voltage reference circuits for biasing (f). The amplyfing cells are presented in A, B and C.

or *off*. It is possible, in this way, to find the best suited combination and, thus, to deliver the best performance in terms of power consumption for the aimed output power.

B. *Proposed circuit*

To achieve a wide selectable output power and to reduce P_{DC} consumption at power back-off, a seven mode programmable PA is proposed in this paper. The PA was designed in 130 nm CMOS technology and is composed of an input impedance matching network (a), a gain stage (b), an interstage impedance matching and coupling component (c), a programmable power stage (d), an output impedance matching network (e) and voltage reference circuits for biasing (f) as presented in Fig. 2. The supply and biasing voltages V_{DD}, V_{Bias1} and VBias2 are set to 1.8 V.

The gain stage consists of a cascode gain amplifier, a choke inductor and an RC feedback circuit. The power stage consists of three cascode power amplifiers cells (power cascodes), a choke inductor and four RC feedback circuits. The cascode topology was chosen due to its high power gain, high isolation, ease of design, ruggedness to low oxide breakdown voltage and usage of only one biasing current for both transistors [1].

The power cascodes are implemented in three cells: "A" presents the transistors with the largest widths (400 µm), "B" presents intermediate widths (300 µm) and "C" presents the smallest widths (175 µm). Those structures are enabled by applying a high logic level on the gate of the upper cascode transistor. Thus, one can enable only "B" by applying high logic to "*EnB*" and low logic to "*EnA*" and "*EnC*". Consequently, the resulting output power delivered to the load is driven only by "B". Table I shows the possible operating modes for the proposed architecture.

Fig. 3 shows the proposed layout measuring 1320 µm by 1285 µm including pads. The employed process technology was GLOBALFOUNDRIES' 130 nm RF CMOS. It includes eight metal levels – three thin metals, two thick metals, three top RF metals – and MiM capacitors. After layout verification, parasitic resistance and capacitance were extracted and post-layout simulations were performed.

TABLE I. GATE WIDTHS OF POWER CASCODES AND DESIGNATION OF OPERATING MODES

Mode (ABC)	W_{total} (µm)	Observation
001	175	Lowest power level
010	300	Intermediate power levels
100	400	
011	300 + 175 = 475	
101	400 + 175 = 575	
110	400 + 300 = 700	
111	400 + 300 + 175 = 875	Highest power level

Fig. 3. The proposed layout presenting metals, transistors, passives and pads. From the top, clockwise: pads for voltage supply, control logic, RF GSG output, biasing voltages, and RF GSG input.

III. Results and Discussion

The metrics to evaluate the proposed PA are rated in two categories: small signal analysis and large signal analysis. For the first category, direct gain scattering parameter (S_{21}) and output stability factor μ were chosen. For the second category, output compression 1 dB point (OCP_{1dB}), saturated output power (P_{SAT}), P_{DC} and power added efficiency (PAE) were selected.

Fig. 4 shows the simulated power gain as a function of frequency for all seven modes. Each stage presents univocal power gain at 2.4 GHz ranging from 13.5 dB for the lowest power mode to 21.1 dB for the highest power mode. Fig. 5 presents the simulated μ factor. As the obtained global minimum μ was 1.05 at 100 Hz, the PA is unconditionally stable for all modes.

Fig. 6 presents the simulated RF power performance of the PA at 2.4 GHz. The low power mode reaches a 6 dBm OCP_{1dB} and an 8.1 dBm P_{SAT}, whereas the high power mode presents an 18.2 dBm OCP_{1dB} and an 18.9 dBm P_{SAT}. The OCP_{1dB} of each mode is, on average, 1.4 dB apart from each other, excepting "001" and "010" modes. Those modes are 5 dB apart due to the transistors in C being half as wide as those in B.

Fig. 7 depicts the simulated consumed P_{DC} as a function of P_{OUT}. This graph acts as a decision provider when selecting one mode over another, as one can evaluate the P_{DC} consumption for a fixed P_{OUT} in every mode. For example, if the PA is required to operate linearly at back-off with a P_{OUT} of 12 dBm, modes "011", "100", "101", "110" and "111" would be eligible. However, considering the lowest P_{DC} consumption, mode "100" would be selected as it consumes a P_{DC} of approximately 40 mW less than "011" mode, 80 mW less than "101" mode and 209 mW less than "111" mode.

Fig. 8 shows the simulated PAE in terms of P_{OUT} for all modes. For a P_{OUT} of 12 dBm, mode "100" possesses the highest PAE of 6.3% and, consequently, this mode is best suited for the application. As P_{DC} and PAE are inversely proportional, for a fixed P_{OUT} and P_{IN}, the highest PAE means the lowest P_{DC} consumption.

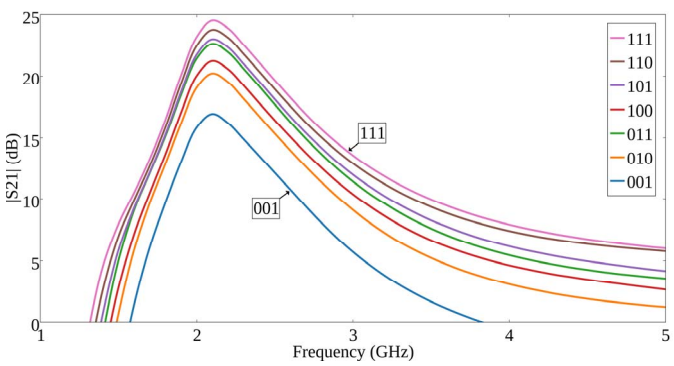

Fig. 4. Simulated direct gain vs. frequency for each configuration of the PA. Every stage performs univocal gain at 2.4 GHz, varying from 13.5 dB to 21.1 dB.

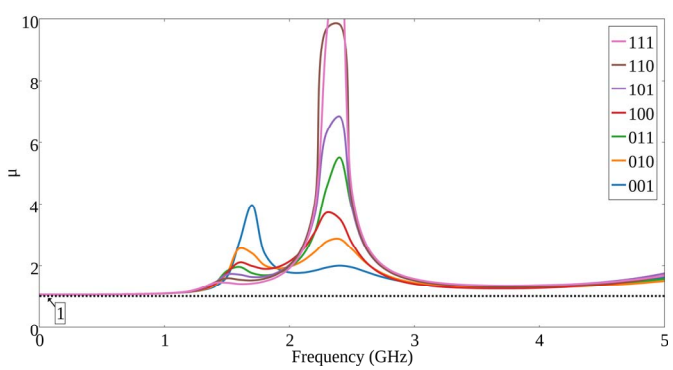

Fig. 5. Simulated μ vs. frequency for each selectable mode. The proposed circuit is unconditionally stable.

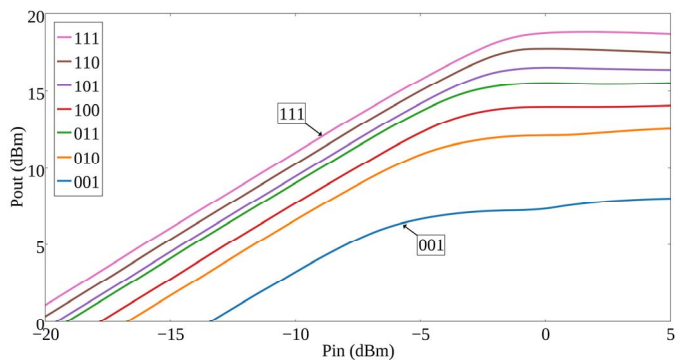

Fig. 6. Simulated P_{OUT} vs. P_{IN} at 2.4 GHz for each selectable configuration of the proposed PA. The highest and lowest modes are aproximately 12 dB apart.

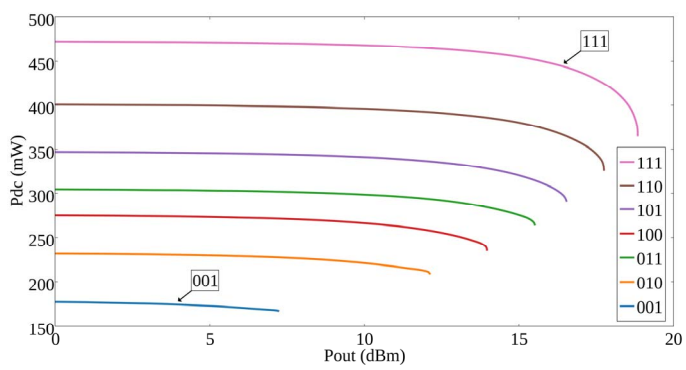

Fig. 7. Simulated P_{DC} vs. P_{OUT} at 2.4 GHz for each selectable mode. The "111" mode and "001" are aproximately 300 mW apart.

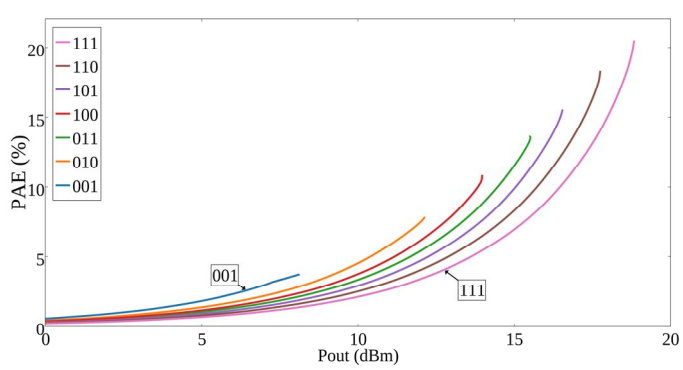

Fig. 8. Simulated PAE Vs P_{OUT} at 2.4 GHz for each selectable mode.

The obtained post-layout results for each operating mode are summarized in Table II. Table III presents a comparison with other published multimode PAs and obtained simulated data. The compared PAs use 65 nm, 130 nm or 180 nm CMOS technology, the same approximate operating frequency and supply voltages varying from 1.5 V to 3.3 V. The proposed circuit presents the widest OCP_{1dB} and P_{SAT} ranges, 12 dB and 11 dB, respectively, the second lowest P_{DC} at OCP_{1dB} range (244 mW) and the second widest gain range (8 dB). The highest OCP_{1dB} and P_{SAT} values are achieved respectively by [6] and [8], which employ differential amplifiers architectures and occupy significantly more silicon area than the other works. Among the circuits that do not use differential topologies, such as [2], [5] and this work, [2] achieves the highest OCP_{1dB} and P_{SAT} by using a higher supply voltage and off-chip biasing voltage and choke inductors. If compared at a P_{OUT} of 18 dBm, [6] consumes 1.6 times more P_{DC} than this work and occupies a 3.2 times larger area. Due to reconfigurability in gain stage, [5] achieves a peak power gain 15 dB higher than this work.

TABLE II. RESULTS OF EACH SELECTABLE OPERATIONAL MODE AT 2.4 GHZ

Mode	OCP_{1dB} (dBm)	P_{SAT} (dBm)	Peak PAE (%)	PAE @ OCP_{1dB} (%)	P_{DC} @ OCP_{1dB} (mW)	Gain (dB)
001	6.0	8.1	3.8	2.4	171	13.5
010	11.0	12.9	8.7	5.9	218	16.8
100	13.2	14.6	11.8	7.9	249	17.8
011	14.8	16.1	14.7	11.2	278	19.2
101	15.9	17.0	16.7	13.5	307	19.6
110	17.3	17.9	19.2	15.3	350	20.4
111	18.2	18.9	21.9	16.5	415	21.1

TABLE III. COMPARISON TO THE STATE-OF-THE-ART

Ref.	Tech. node (nm)	V_{DD} (V)	Gain (dB)	Area (mm^2)	P_{DC} @ OCP_{1dB} (mW)	OCP_{1dB} (dBm)	P_{SAT} (dBm)
[2]	180	3.3	15 /23	0.88	145 /445	16 /22	17 /23
[5] [1]	130	1.8	27 /36	1.2	179 /225	16	17
[6]	130	1.5	NA [2]	5.48	239 /688 [3]	NA	18 /23
[7]	180	3.3	NA /35	2	429 /2574	NA /27	21 /31
[8]	65	NA	NA	4.9	385 /2840	17 /26	24 /28
This work [1]	130	1.8	13 /21	1.7	171 /415	6 /18	8 /19

[1] Simulated results. [2] Not available. [3] Peak value.

IV. CONCLUSION

This paper presented the simulated results of a linear, fully integrated, two-stage digitally programmable 130 nm CMOS PA operating at 2.4 GHz and occupying a silicon area of 1.7 mm^2. A common load is driven by a set of amplifying cells which can be independently enabled or disabled by a digital control circuit. All seven operational modes are univocal in terms of OCP_{1dB}, P_{SAT} and power gain at 2.4 GHz. The lowest power mode performs a P_{SAT} of 8.1 dBm, a power gain of 13.5 dB and consumes 171 mW P_{DC} to deliver an OCP_{1dB} of 6 dBm. The highest power mode reaches a P_{SAT} of 18.9 dBm, a power gain of 21.1 dB and consumes 415 mW of P_{DC} to deliver an OCP_{1dB} of 18.2 dBm. Operation at power back-off presented significant power reduction when lower P_{OUT} is required. The comparison with other published works shows the proposed PA presents the widest OCP_{1dB} and P_{SAT} ranges. The circuit has been sent to the foundry for fabrication and measurements are expected to the first quarter of 2016.

REFERENCES

[1] H. S. Ruiz and R. B. Pérez, *Linear CMOS RF Power Amplifiers: A Complete Design Workflow*, 1st ed. New York: Springer, 2014.

[2] Y. Yoon, J. Kim, H. Kim, K. H. An, O. Lee, C. H. Lee and J. S. Kenney, "A dual mode CMOS RF power amplifier with integrated tunable matching network", *IEEE Transactions on Microwave and Techniques*, Vol. 60, pp. 77-88, November 2011.

[3] P. J. Zampardi, "Will CMOS amplifiers ever kick-GaAs?", *IEEE Custom Integrated Circuits Conference*, pp. 1-4, September 2010.

[4] R. J. Baker, *CMOS: Circuit Design, Layout And Simulation*, 3rd ed. New Piscataway: IEEE Press, 2010.

[5] E. L. Santos, B. Leite and A. Mariano, "Multimode 2.4 GHz CMOS power amplifier with gain control for efficiency enhancement at power backoff", *IEEE 6th Latin American Symposium on Circuits & Systems*, pp. 1-4, February 2015.

[6] P. Raeynaert and M. S. J. Steyaert, "A 2.45 GHz 0.13 um CMOS PA with parallel amplification", *IEEE Journal of Solid State Circuits*, Vol. 42, No. 3, pp. 551-562, March 2007.

[7] K. H. An, D. H. Lee, O. Lee, H. Kim, J. Han, W. Kim, C. H. Lee, H. Kim and J. Laskar, "A 2.4 GHz fully integrated linear CMOS power amplifier with discrete power control", *IEEE Microwave and Wireless Components Letters*, Vol. 19, No. 7, pp. 479-481, July 2009.

[8] A. Tuffery, N. Deltimple, E. Kerhervé, V. Knopik and P. Cathelin, "CMOS fully integrated reconfigurable power amplifier with efficiency enhancement for LTE applications", *Electronics Letters*, Vol. 51, No. 2, pp. 181-183, January 2015.